GS2930 Series

18V 300mA LDO Linear Regulator

Product Description

The GS2930 series is a group of low dropout linear regulators made by CMOS process. It supports the input voltage range of 2.5V to 18V and can also provide current up to 300mA under the condition of good heat dissipation.

Features

- Input Voltage Range: 2.5V to 18V
- Output Current: up to 300mA
- Output Accuracy: ±2%
- Low Quiescent Current: 2μA (Typical)
- PSRR: 65dB@1KHz
- Current Limit, Thermal Shutdown and Short-Circuit Protection
- Available in SOT-23-3L, SOT-23-5L. SOT-223 and SOT-89-3L Packages
- RoHS Compliant and Halogen Free

Applications

- Portable and Battery-Powered Equipment
- Set-top Boxes
- Ultra Low Power Applications
- Wearable Electronics

Functional Block Diagram

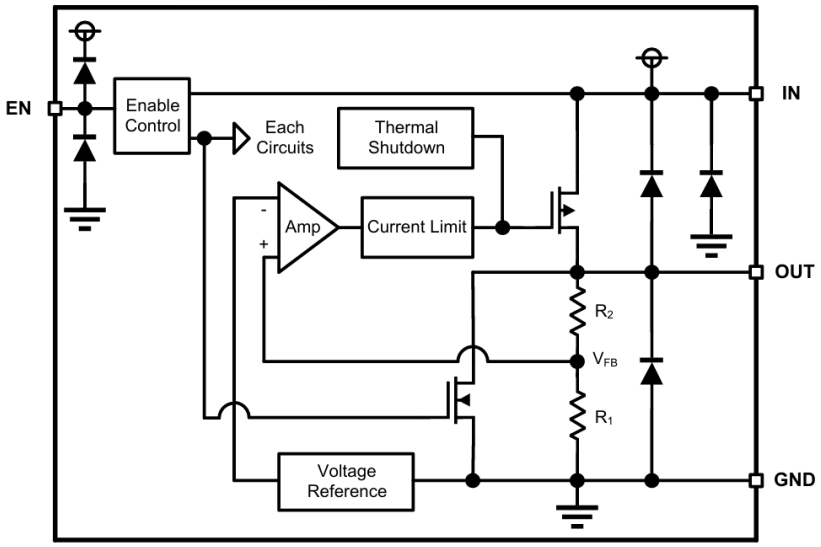

Packages & Pin Assignments

SOT-23-3L	SOT-23-5L	SOT-89-3L	SOT-223
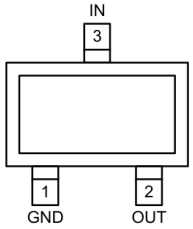	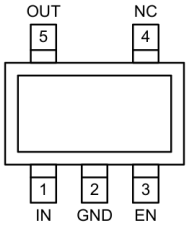	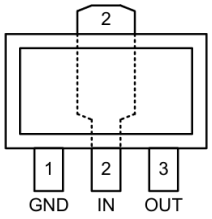	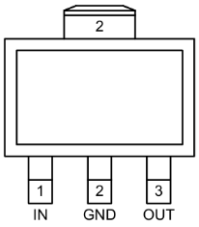

Pin Name	Description
IN	Input to the device. Use the recommended value of the input capacitor and place it as close to the IN and GND pins of the device as possible to help obtain the best transient response and minimize the input impedance.
OUT	Output of the regulator. An output capacitor needs to be placed between OUT and GND to maintain the stability of the device output. Use the capacitor with the recommended value and place it as close as possible to the OUT and GND pins of the device to help obtain the best transient response.
GND	Ground
EN	Enable pin. Drive EN high level to enable the device, and drive EN low level to turn off the device. Do not float this pin. If not need, connect EN to IN.
NC	No internal connection. This pin can float, but when this pin is connected to GND, the device has better thermal performance.

Ordering and Marking Information

Ordering Information				
Vout	**Part Number**	**Marking**	**Package**	**Quantity/Reel**
1.2V	GS2930JL12F	DB□□	SOT-23-3L	3,000
1.8V	GS2930JL18F	A7j□□		
2.8V	GS2930JL28F	A7t□□		
3.3V	GS2930JL33F	A7y□□		
5V	GS2930JL50F	A7P□□		
1.2V	GS2930L12F	DB□□	SOT-23-5L	3,000
1.8V	GS2930L18F	A9j□□		
2.8V	GS2930L28F	A9t□□		
3.3V	GS2930L33F	A9y□□		
5V	GS2930L50F	A9P□□		
1.8V	GS2930Y18F	DD□□	SOT-89-3L	1,000
2.8V	GS2930Y28F	A7t□□		
3.3V	GS2930Y33F	A7y□□		
5V	GS2930Y50F	DK□□		
5V	GS2930JX50F	DK□□	SOT-223	2,500

GS2930 1 1 2 2 F

- **Product Code:**
  GS2930
- **Package Code:**
  1 1 as below
  JL for SOT-23-3L
  L for SOT-23-5L
  Y for SOT-89-3L
  JX for SOT-223
- **Voltage Code:**
  2 2 as below
  12 for 1.2V
  50 for 5V etc.
- **Green Level:**
  F for RoHS Compliant and Halogen Free

Marking Information

- **GS Code**
  □□ is GS Code

Absolute Maximum Ratings [1] (T_A=25ºC, unless otherwise specified)

Symbol	Parameter		Rating	Units
V_{IN}	Supply Voltage [2]		-0.3 - 24	V
V_{EN}	Enable Pin Voltage [2]		-0.3 - 24	V
P_D	Maximum Power Dissipation [3]	SOT-23-3L	380	mW
		SOT-23-5L	400	
		SOT-89-3L	600	
		SOT-223	1000	
$R_{\theta JA}$	Thermal Resistance, Junction to Ambient [3]	SOT-23-3L	261	ºC/W
		SOT-23-5L	248	
		SOT-89-3L	160	
		SOT-223	102	
T_J	Maximum Junction Temperature		125	ºC
T_{STG}	Storage Temperature Range		-40 - 125	ºC
T_{LEAD}	Lead Temperature (Soldering 10sec)		260	ºC

NOTE:

1. Stresses beyond those listed under Absolute Maximum Ratings may cause permanent damage to the device. These are stress ratings only, and functional operation of the device at these or any other conditions beyond those indicated under Recommended Operating Conditions is not implied. Exposure to absolute-maximum-rated conditions for extended periods may affect device reliability
2. All voltages are with respect to network ground terminal.
3. Device mounted on 1 in^2 FR-4 substrate PCB covered with 2 ounces of copper.

Recommended Operating Range

Symbol	Parameter	Value	Units
V_{IN}	V_{IN} Supply Voltage	2.5 - 18	V
I_{OUT}	Output Current	0 - 300	mA
T_J	Operating Junction Temperature Range	-40 - 125	ºC
T_A	Operating Ambient Temperature Range	-40 - 85	ºC

Electrical Characteristics (T_A =25ºC, unless otherwise specified.)

Symbol	Parameter	Test Conditions	Min.	Typ.	Max.	Units
V_{IN}	Input Voltage		2.5	-	18	V
V_{OUT}	Output Accuracy	I_{OUT}= 1mA	-2	-	2	%
I_Q	Quiescent Current	I_{OUT}= 0mA	-	2	5	μA
I_{SHD}	Shutdown Current	V_{EN}=0V	-	-	0.2	μA
V_{DROP} [4]	Dropout Voltage	I_{OUT}=100mA, V_{OUT}< 1.8V	-	350	700	mV
		I_{OUT}=100mA, V_{OUT}=1.8V to 2.8V	-	200	500	
		I_{OUT}=100mA, V_{OUT}=3.3V		160	270	
		I_{OUT}=100mA, V_{OUT}=5V		110	270	
R_{LINE}	Line Regulation	V_{IN}= V_{OUT} +1V to 18V, I_{OUT}=10mA	-	0.1	0.3	%/V
R_{LOAD}	Load Regulation	V_{IN}= V_{OUT} +1V I_{OUT}=1mA to 100mA	-	10	-	mV
PSRR	Power Supply Rejection Ratio	I_{OUT}=50mA, f=1KHz	-	65	-	dB
I_{LIM}	Current Limit	V_{OUT} = 0.5 × $V_{OUT(Nominal)}$ V_{IN} = 5.0V	350	500	-	mA
I_{SHORT}	Short Current	OUT short to GND	-	75	-	mA
V_{ENH}	EN High Voltage	V_{IN}=6V	1.5	-	-	V
V_{ENL}	EN Low Voltage		-	-	0.3	V
T_{SD}	Thermal Shutdown	Temperature rising	-	150	-	ºC
$\triangle T_{SD}$	T_{SD} Hysteresis	Temperature falling	-	20	-	ºC
R_{DSG}	R_{ON} of Discharge MOSFET	V_{IN}= 5V, V_{EN}=0V	-	150	-	Ω

NOTE:

4. The dropout voltage is defined as V_{IN} - V_{OUT}, when V_{OUT} =98% x $V_{OUT(NOM)}$

Performance Characteristics (T_A =25°C, unless otherwise specified.)

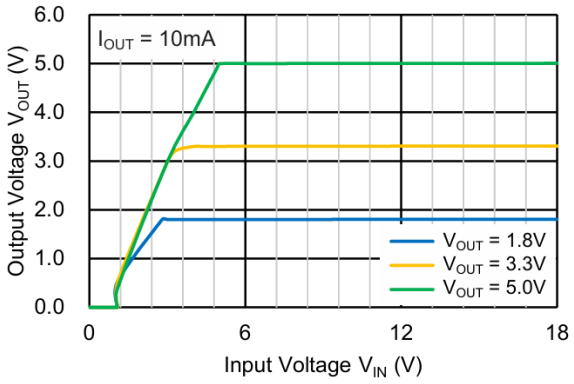

Line Regulation

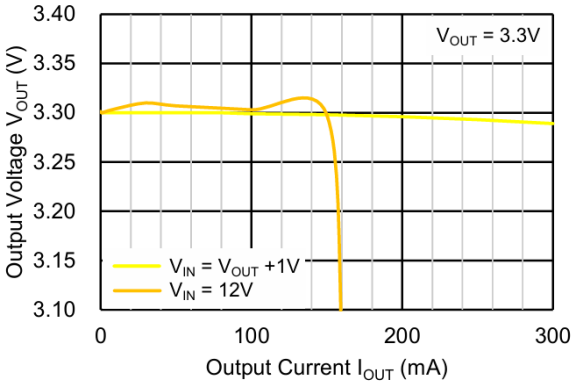

Load Regulation

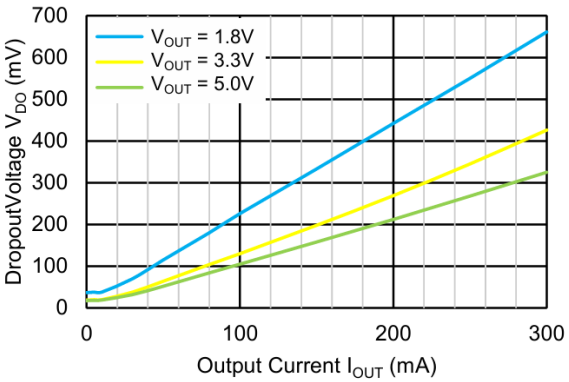

Dropout Voltage

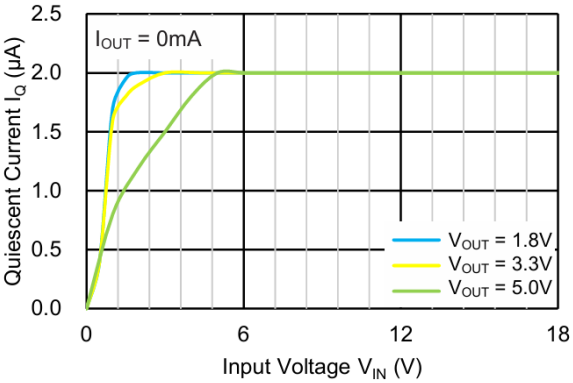

I_Q vs V_{IN}

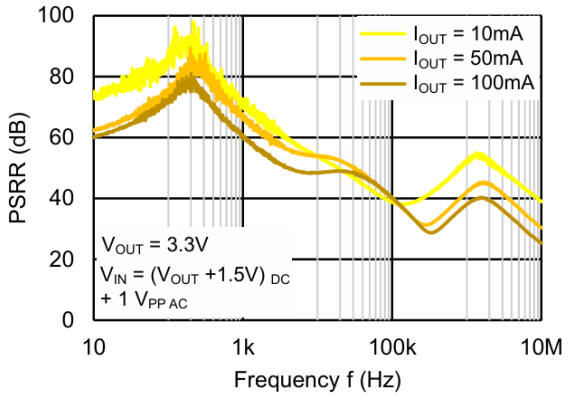

Power Supply Rejection Ratio

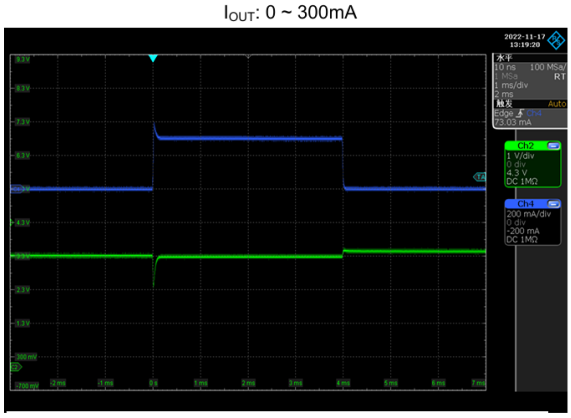

V_{OUT} = 3.3V, V_{IN} = V_{EN} = V_{OUT} +1V, CH_2: V_{OUT}, CH_4: I_{OUT}

Load Transient

Performance Characteristics

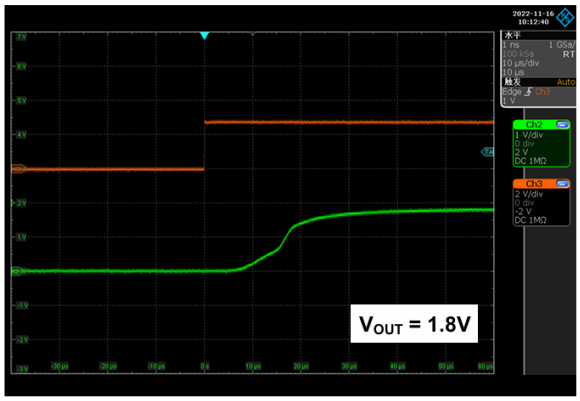

EN High

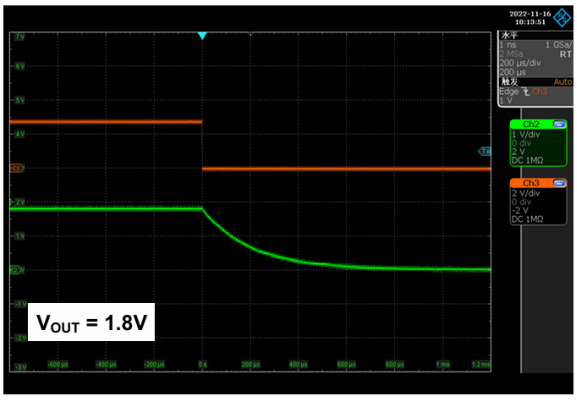

EN Low

Typical Application Circuit

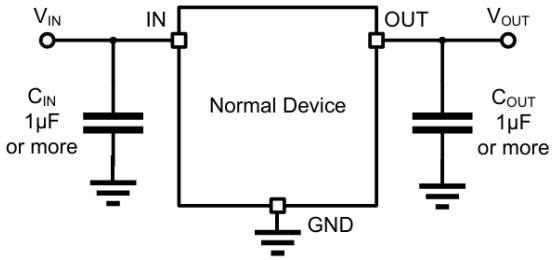

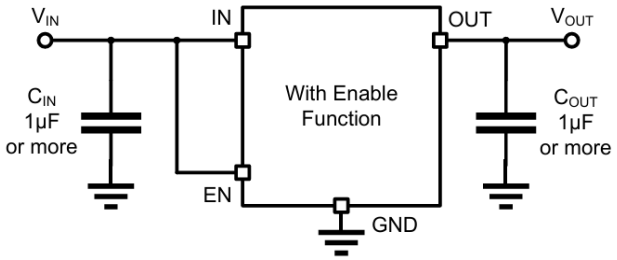

Layout Recommendation

- Place the input and output capacitors as close to the pins of the device as possible;
- The device is connected by copper plane and the heat sink (or back pad) of the device is fully welded with PCB to obtain better heat dissipation performance and lower on resistance;
- Heat sink holes are placed around the device to help the circuit dissipate more heat energy. However, attention should be paid to the position of the heat sink holes to prevent the solder (or solder paste) on the IC pad from being absorbed by the heat sink holes and being damaged during welding.

SOT-23-3L

Package Dimension

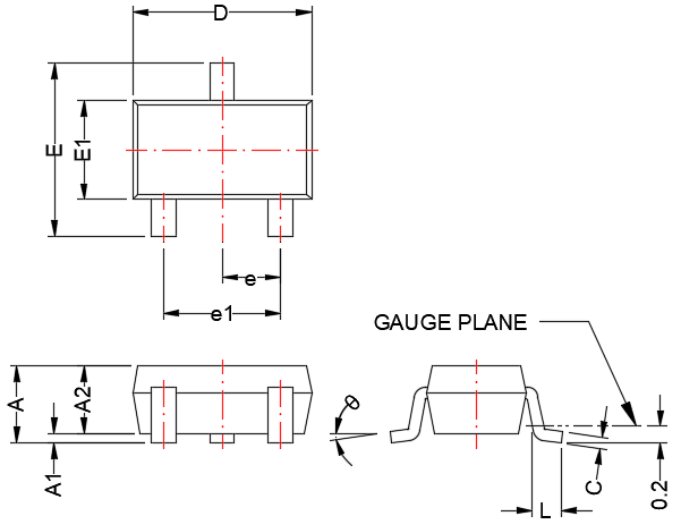

Recommended Land Pattern

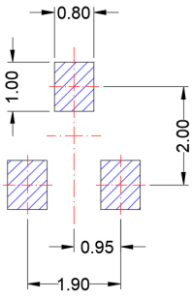

Unit: mm

Dimensions				
Symbol	Millimeters		Inches	
	MIN	MAX	Min	MIN
A	0.90	1.45	0.035	0.057
A1	0.00	0.15	0.000	0.006
A2	0.90	1.30	0.035	0.051
b	0.30	0.50	0.012	0.020
c	0.08	0.26	0.003	0.010
D	2.70	3.10	0.106	0.122
E	2.20	3.00	0.087	0.118
E1	1.30	1.75	0.051	0.069
e	0.95 BSC		0.037 BSC	
e1	1.90 BSC		0.075 BSC	
L	0.3	0.6	0.012	0.024
θ	0°	8°	0°	8°

NOTE:
Dimensions are exclusive of Burrs, Mold Flash & Tie Bar extrusions.

SOT-23-5L

Package Dimension

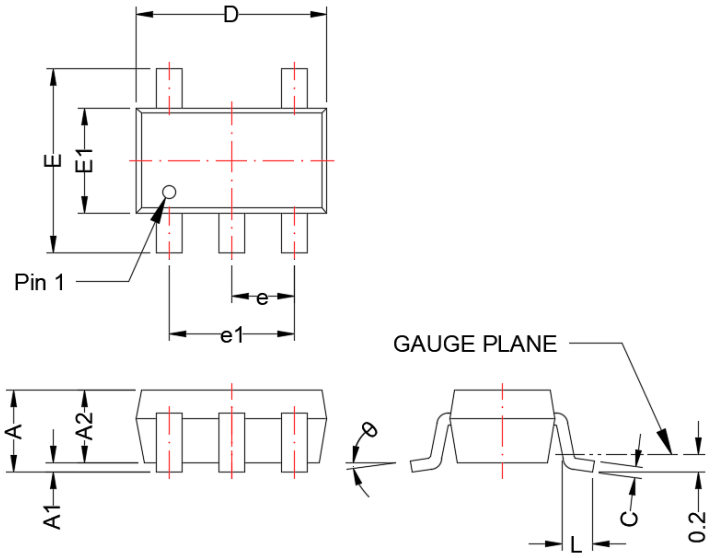

Recommended Land Pattern

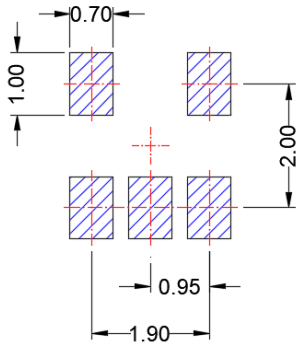

Unit: mm

Dimensions

Symbol	Millimeters		Inches	
	MIN	MAX	Min	MIN
A	0.90	1.45	0.035	0.057
A1	0.00	0.15	0.000	0.006
A2	0.90	1.30	0.035	0.051
b	0.30	0.50	0.012	0.020
c	0.08	0.26	0.003	0.010
D	2.70	3.10	0.106	0.122
E	2.20	3.00	0.087	0.118
E1	1.30	1.75	0.051	0.069
e	0.95 BSC		0.037 BSC	
e1	1.90 BSC		0.075 BSC	
L	0.3	0.6	0.012	0.024
θ	0°	8°	0°	8°

NOTE:
Dimensions are exclusive of Burrs, Mold Flash & Tie Bar extrusions.

SOT-89-3L

Package Dimension

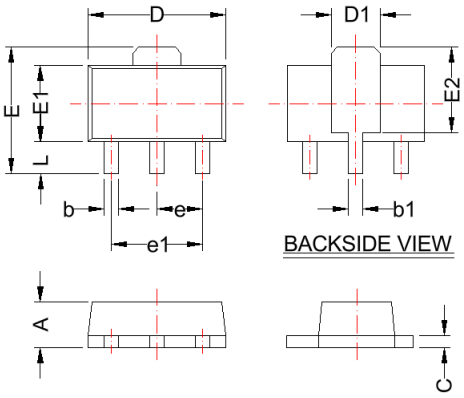

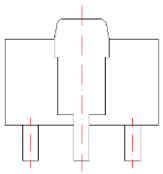

Type I

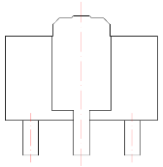

Type II

BACKSIDE VIEW

Recommended Land Pattern

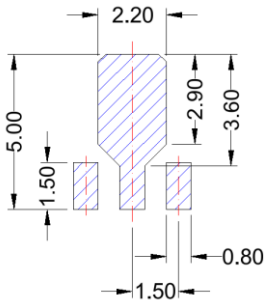

Unit:mm

Dimensions

SYMBOL	Millimeters		Inches	
	MIN	MAX	MIN	MAX
A	1.40	1.60	0.055	0.063
b	0.30	0.55	0.012	0.022
b1	0.40	0.60	0.016	0.024
c	0.35	0.44	0.014	0.017
D	4.40	4.60	0.173	0.181
D1	1.55 REF		0.061 REF	
E	3.90	4.30	0.154	0.169
E1	2.30	2.60	0.091	0.102
E2	2.84 REF		0.112 REF	
e	1.50 BSC		0.059 BSC	
e1	3.00 BSC		0.118 BSC	
L	0.89	1.20	0.035	0.047

NOTE:
Dimensions are exclusive of Burrs, Mold Flash & Tie Bar extrusions.

SOT-223

Package Dimension

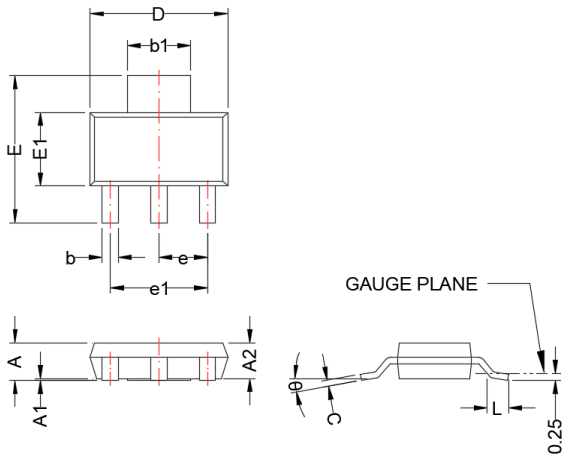

Recommended Land Pattern

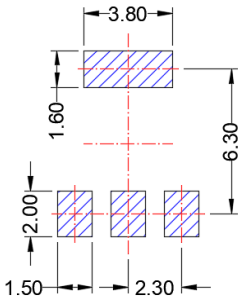

Unit:mm

Dimensions				
Symbol	Millimeters		Inches	
	Min	Max	Min	Max
A	1.50	1.80	0.059	0.071
A1	0.00	0.12	0.000	0.005
A2	1.45	1.75	0.057	0.069
b	0.60	0.84	0.024	0.033
b1	2.90	3.10	0.114	0.122
c	0.23	0.35	0.009	0.014
D	6.20	6.70	0.244	0.264
E	6.70	7.30	0.264	0.287
E1	3.30	3.70	0.130	0.146
e	2.30 BSC		0.091 BSC	
e1	4.60 BSC		0.181 BSC	
L	0.75	---	0.030	---
θ	0°	10°	0°	10°

NOTE:
Dimensions are exclusive of Burrs, Mold Flash & Tie Bar extrusions.

NOTICE

- Globaltech Semiconductor assumes no responsibility for equipment failures that result from using products at values that exceed, even momentarily, rated values (such as maximum ratings, operating condition ranges, or other parameters) listed in products specifications of any and all Globaltech Semiconductor products described or contained herein. Globaltech Semiconductor products are not designed for use in life support appliances, devices or systems where malfunction of these products can be reasonably expected to result in personal injury. Reproduction in whole or in part is prohibited without the prior written consent of the copyright owner.

- Applications shown on the herein document are examples of standard use and operation. Customers are responsible in comprehending the suitable use in particular applications. Globaltech Semiconductor makes no representation or warranty that such applications will be suitable for the specified use without further testing or modification.

- Information furnished is believed to be accurate and reliable. However, Globaltech Semiconductor assumes no responsibility for the consequences of use of such information nor for any infringement of patents or other rights of third parties, which may result from its use. No license is granted by implication or otherwise under any patent or patent rights of Globaltech Semiconductor. Specifications mentioned in this publication are subject to change without notice. This publication supersedes and replaces all information without express written approval of Globaltech Semiconductor.

CONTACT US

GS Headquarter	
	4F, NO.43-1, Lane 11, Sec. 6, Minquan E. Rd Neihu District, Taipei City 114761, Taiwan (R.O.C).
	886-2-2657-9980
	886-2-2657-3630
	sales_twn@gs-power.com

RD Division	
	824 Bolton Drive Milpitas. CA. 95035
	1-408-457-0587